7712/7724

Application：Sewing Machine、Drill & Screwdriver

用途：縫紉機、電動工具

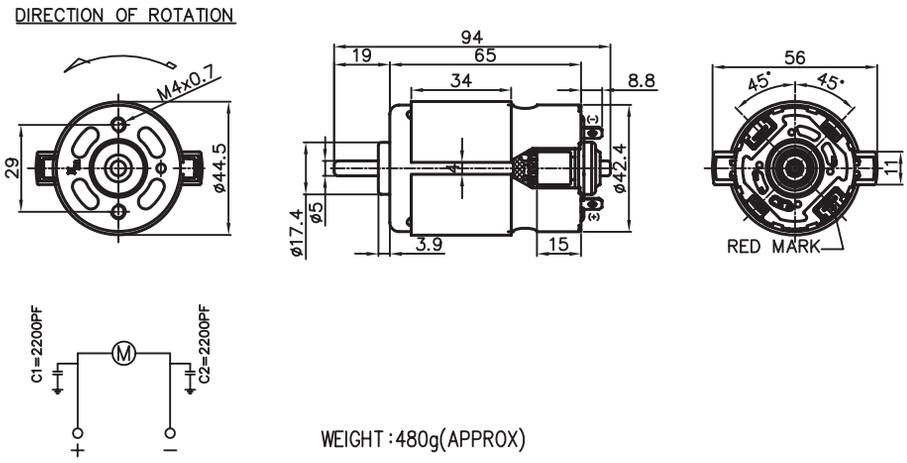

WEIGHT:480g(APPROX)

MODEL	VOLTAGE		NO LOAD		AT MAXIMUM EFFICIENCY						STALL		
	OPERATING RANGE	NOMINAL	SPEED	CURRENT	SPEED	CURRENT	TORQUE		OUTPUT	EFF	CURRENT	TORQUE	
			rpm	A	rpm	A	g−cm	mN−m	W	%	A	g−cm	mN−m
7712−10215	100 − 230	150V CONSTANT	4700	0.07	4058	0.20	477	46.76	19.88	69	1.12	3790	312.75
7712−1690	60 − 150	100V CONSTANT	8000	0.14	6845	0.52	532	52.16	37.40	73	3.39	4089	400.88
7724−09125	100 − 230	110V CONSTANT	3000	0.06	2304	0.16	352	34.51	8.33	48	0.48	1369	134.22
7724−2232	50 − 120	100V CONSTANT	12300	0.27	8643	2.86	1510	148.04	134.03	47	7.50	5433	532.65
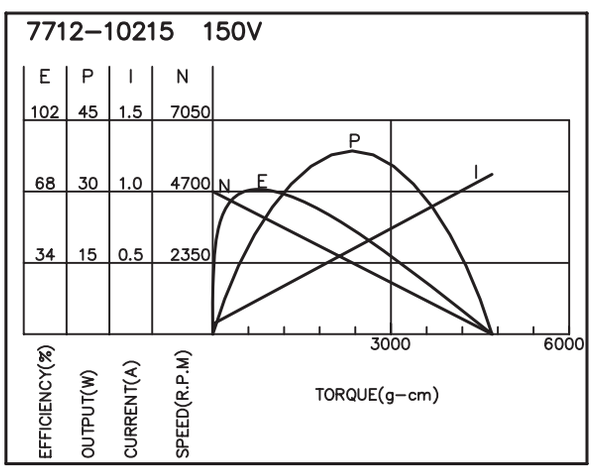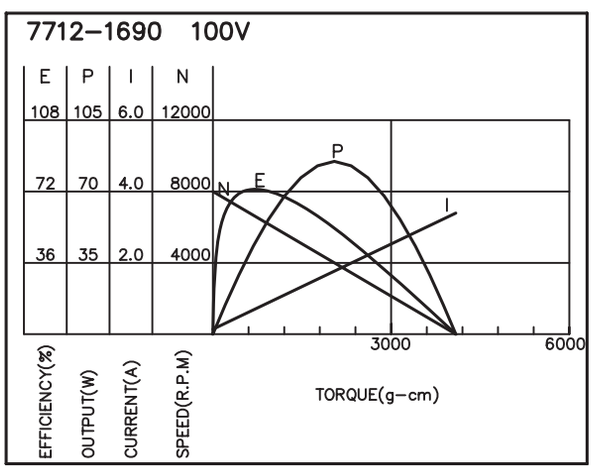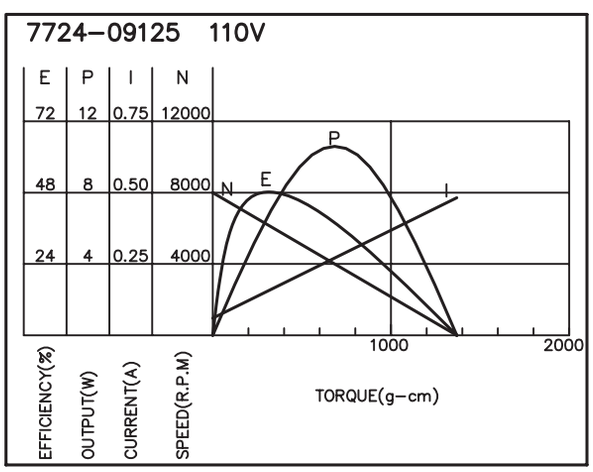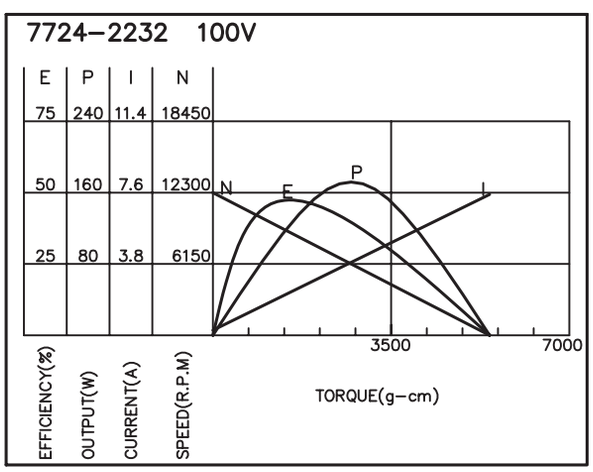
馬達的出軸長度及性能參數，EMC 對策可依客人要求做調整，詳情可詢問相關業務人員。
Please inquire your sales representative for output,performance and EMC solution.